Electrolux PROFESSIONAL

Standard Preparation 1200 mm Cupboard Sink for Dishwasher with 1 Bowl & Right Drainer

ITEM #

MODEL #

NAME #

SIS #

AIA #

132928 (MARMDXN)	Cupboard Sink for Dishwasher with 1 bowl and 1 right hand drainer, 1200mm

Short Form Specification

Item No.

Made entirely from stainless steel. Inner welded frame in stainless steel. Unique connection of panels to inner frame. The 50mm high worktop in 304 AISI stainless steel, 1mm in thickness, incorporates a layer of sound deadening material and has upturned edges. Upstand (h=100mm) with 8mm rounded edge. Drainage area suitable for drying operations. Additional space under drainer for undercounter dishwasher. Sound-deadened hinged door. Base panel in 304 AISI stainless steel and height-adjustable intermediate shelf. Sink bowl in 304 AISI stainless steel with overflow pipe and drain hole. Mounted on feet, adjustable in height.

APPROVAL:

Main Features

- Sturdiness, stability and reliability of table accurately tested.

Construction

- 50 mm worktop in 304 AISI stainless steel with upturned edges, incorporates an 18 mm layer of sound deadening material.
- Reinforced side and base panel in 304 AISI stainless steel.
- 304 AISI stainless steel feet, 200 mm high and 54 mm in diameter, adjustable by -50/+30 mm.
- Inner welded frame in stainless steel to guarantee superior strength and stability.
- Drainage area suitable for drying operations
- 100 mm upstand with 10 mm radioused corner and 13 mm deep, designed to be used against a wall.
- Constructed entirely in stainless steel to offer maximum durability.
- Bottom part of drain left free to house an undercounter dishwasher.
- Hinged door with sound deadening internal panels, fitted with 304 AISI stainless steel hinges on the inner sides.
- Wide range of taps are available to suit every need.

Optional Accessories

- Wheel kit for cupboards, 4 wheels (2 with brakes), D=1000 mm — PNC 855299 ❑
- Elbow operated mixer tap with spout 3/4", single hole — PNC 855322 ❑
- Elbow operated mixer tap with short spout 3/4", single hole — PNC 855323 ❑
- Foot operated mixer tap (hot and cold) with spout 3/4'' — PNC 855328 ❑
- Single plastic drain syphon 2 " for Sinks — PNC 895313 ❑

Standard Preparation
1200 mm Cupboard Sink for Dishwasher with 1 Bowl & Right Drainer

Front

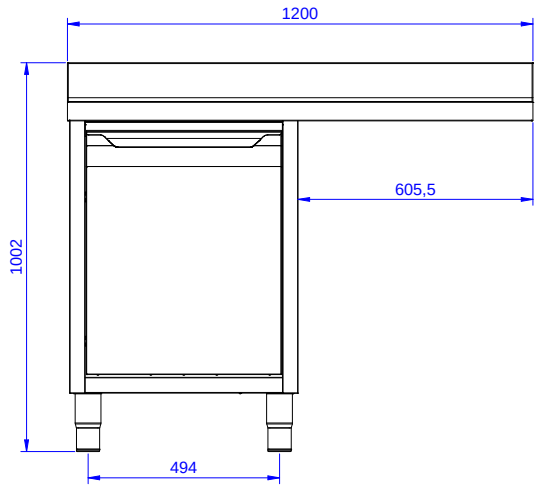

Side

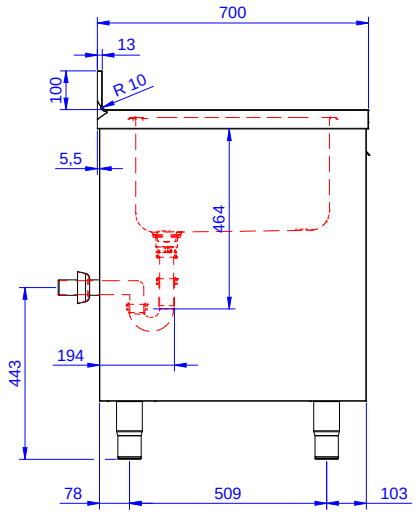

D = Drain

Top

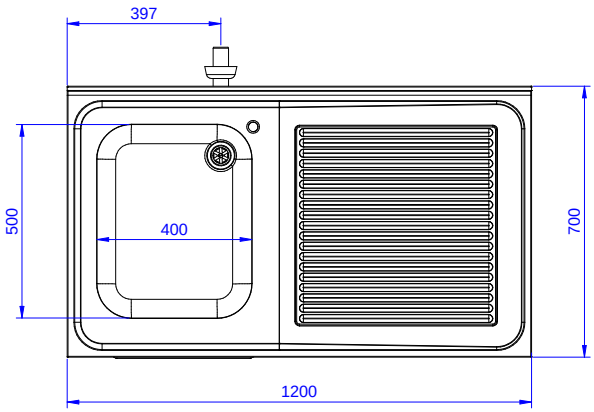

Drain:

Drainer position:	
132928 (MARMDXN)	Right to left

Key Information:

Cabinet width:	1145 mm
Cabinet depth:	645 mm
Cabinet height:	385 mm
External dimensions, Width:	1200 mm
External dimensions, Depth:	700 mm
External dimensions, Height:	1000 mm
Upstand Dimensions, Height:	100 mm
Upstand Dimensions, Depth:	13 mm
Upstand Dimensions, Radius:	R=10
Bowls number	1
Bowl dimensions	400x500xH300
Number and type of doors:	1 Hinged
Worktop thickness:	50 mm
Net weight:	55 kg

The company reserves the right to make modifications to the products without prior notice. All information correct at time of printing.

2024.10.09